REVISIONS		
REV.	DESCRIPTION	DATE

PRINT MAY BE REDUCED - DO NOT SCALE.

ITEM NO.	PART NO.	PART NAME	QTY
1	SSU1R	BATTERY 12V36AH	1
2	MAK-UP-239	35 MM^2 M8 420 MM BLACK BATTERY CABLE ASSEMBLY	1
3	MAK-UP-238	35 MM^2 M8 800 MM RED BATTERY CABLE ASSEMBLY	1
4	MAK-UP-237	35 MM^2 M8 400 MM 2 B&S RED BATTERY CABLE ASSEMBLY	1
5	U1 BLACK	BATTERY BOX	1

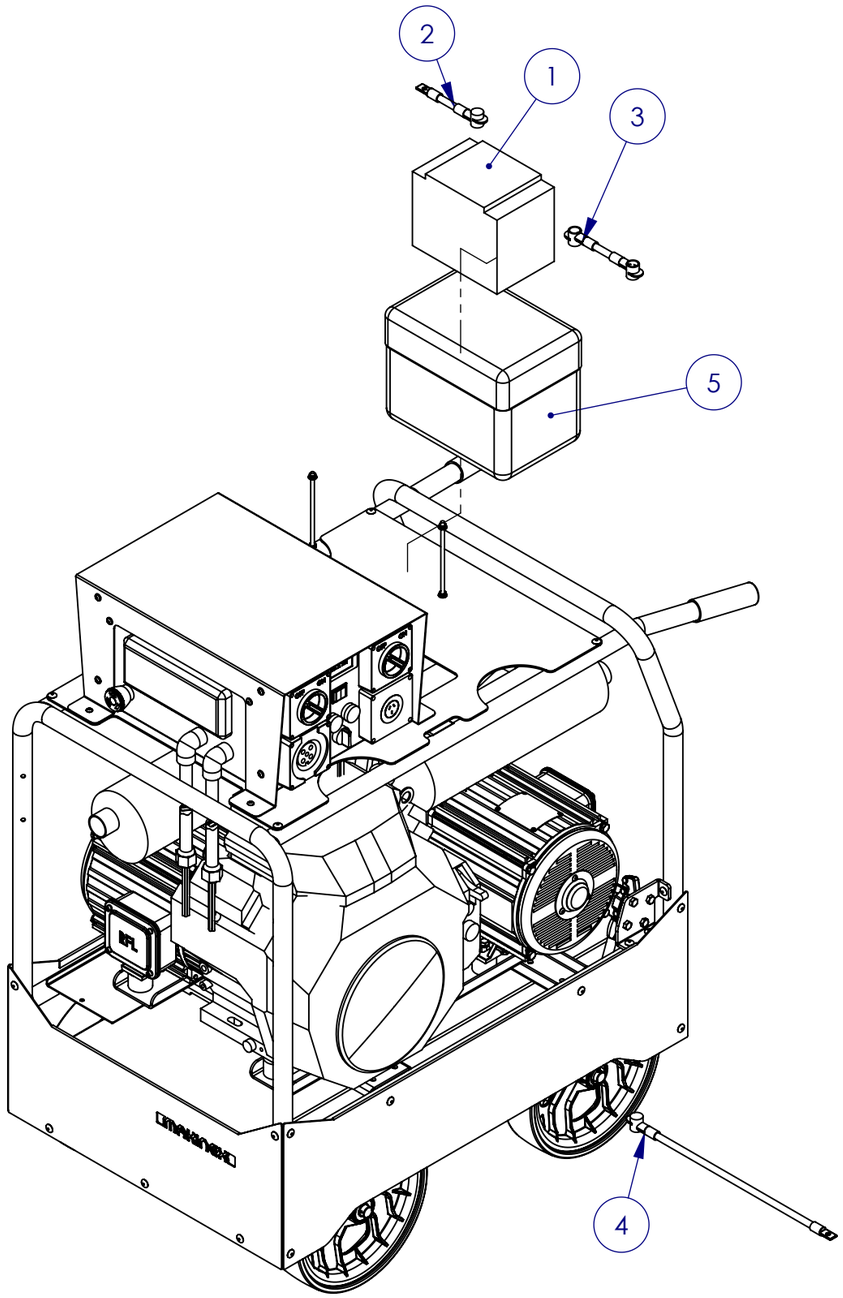

MAKINEX

Sydney (Head Office)
15 Waltham St
Artarmon, 2064
NSW, Australia

Ph: 1300 795 953
Fax: (02) 9439 9815
www.makinex.com.au
sales@makinex.com.au

COPYRIGHT 2019 MAKINEX.
WARNING: Copyright in this drawing remains the property of Kennards Innovation and Sustainability and copying in whole or part is not permitted without the written authority of the copyright owner.

GENERAL TOLERANCES
(Unless otherwise noted)
0-100mm: ± 0.25 mm
100mm - 500mm: ± 0.5 mm
500mm +: ± 1.0 mm
Angular: ± 1 deg.

Third Angle Projection - AS 1100

DATE: 22-Jun-21

SCALE: 1:10 A3

All Dimensions are in Millimetres
Break All Sharp Corners and Remove Burrs & Swarf

25
Denotes Critical Dimension

PROJECT: GEN-32P-AU

DWG NO.	TITLE	MATERIAL	REV: 001	FINISH
GEN-32P-AU	COMPLETE ASSEMBLY	SEE PARTS	DRN: DM	SEE PARTS

NOTES:

PRINTED: 22-Jun-21

REVISIONS		
REV.	DESCRIPTION	DATE

PRINT MAY BE REDUCED - DO NOT SCALE.

ITEM NO.	PART NO.	PART NAME	QTY
1	GEN-23P-03-19	WHEEL AXLE	2
2	GEN-23P-01-23	COVER PANEL	2
3	MAK-UP-25	ENGINE MOUNT (40MM x 30MM 50 SHORE A)	8
4	MAK-UP-116	MAKINEX BIG X-WHEELS W/ BEARINGS	4
5	MAK-UP-01	20MM WHEEL BEARING	8
6	MAK-UP-236	M6-M8 EARTH CABLE 4 MM X 300 MM	4
7	GEN-23P-01-22	SIDE PANEL	2
8	MAK-UP-205	BLACK MATTE HONEYCOMB GRIP 29.97 x 115.57 MM	2
9	GEN-23P-03-00	50L FUEL TANK ASSEMBLY	1

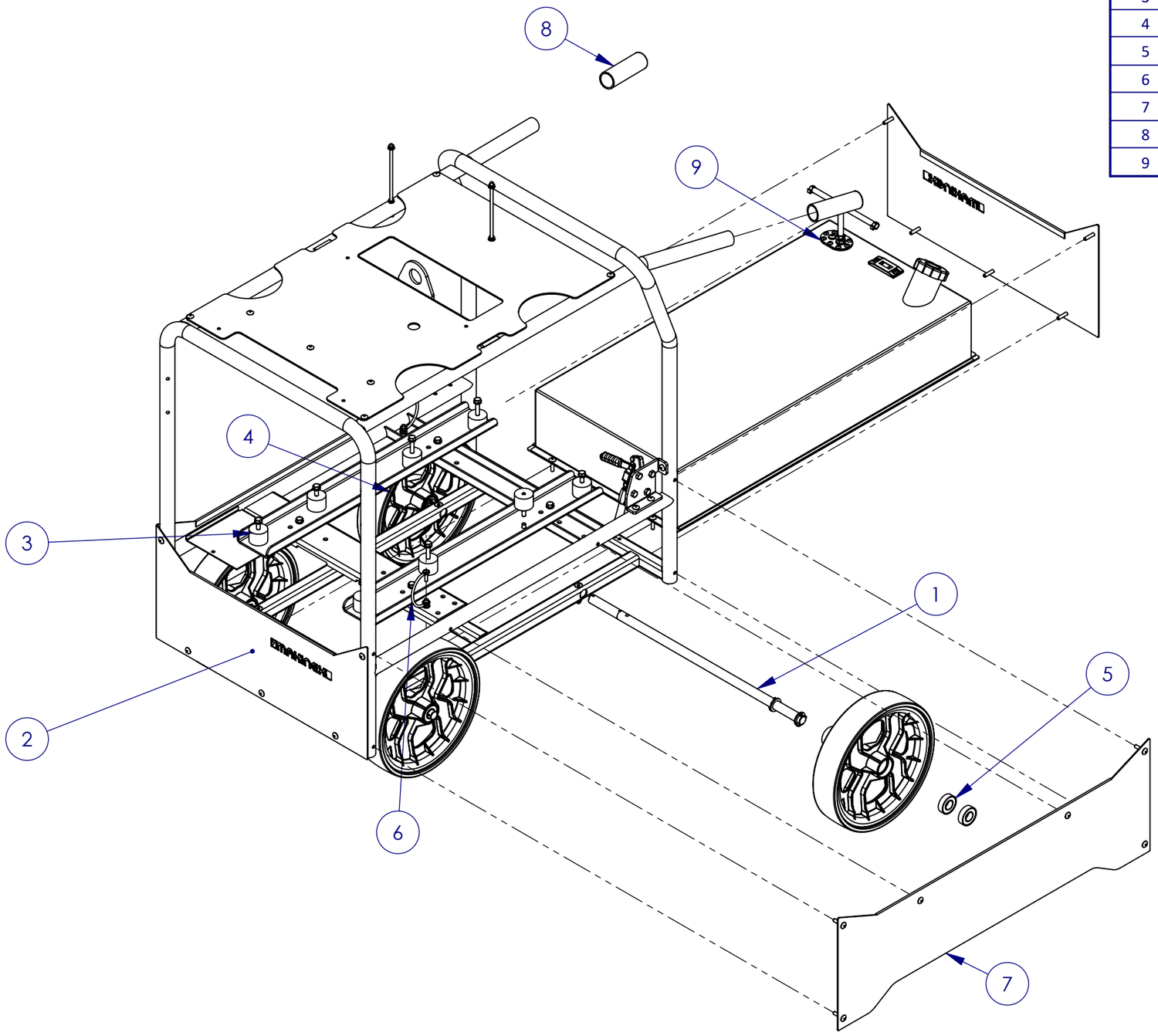

MAKINEX

Sydney (Head Office)
15 Waltham St
Artarmon, 2064
NSW, Australia

Ph: 1300 795 953
Fax: (02) 9439 9815
www.makinex.com.au
sales@makinex.com.au

COPYRIGHT 2019 MAKINEX.
WARNING: Copyright in this drawing remains the property of Kennards Innovation and Sustainability and copying in whole or part is not permitted without the written authority of the copyright owner.

GENERAL TOLERANCES
(Unless otherwise noted)
0-100mm: ± 0.25 mm
100mm - 500mm: ± 0.5 mm
500mm +: ± 1.0 mm
Angular: ± 1 deg.

Third Angle Projection - AS 1100

DATE: 22-Jun-21

SCALE: 1:20 A3

All Dimensions are in Millimetres
Break All Sharp Corners and Remove Burrs & Swarf

25
Denotes Critical Dimension

PROJECT: GEN-32P-AU

DWG NO.	TITLE	MATERIAL	REV: 002	FINISH
GEN-32P-01-00	FRAME ASSEMBLY	SEE PARTS	DRN: DM	SEE PARTS

NOTES:

PRINTED: 22-Jun-21

REVISIONS		
REV.	DESCRIPTION	DATE

PRINT MAY BE REDUCED - DO NOT SCALE.

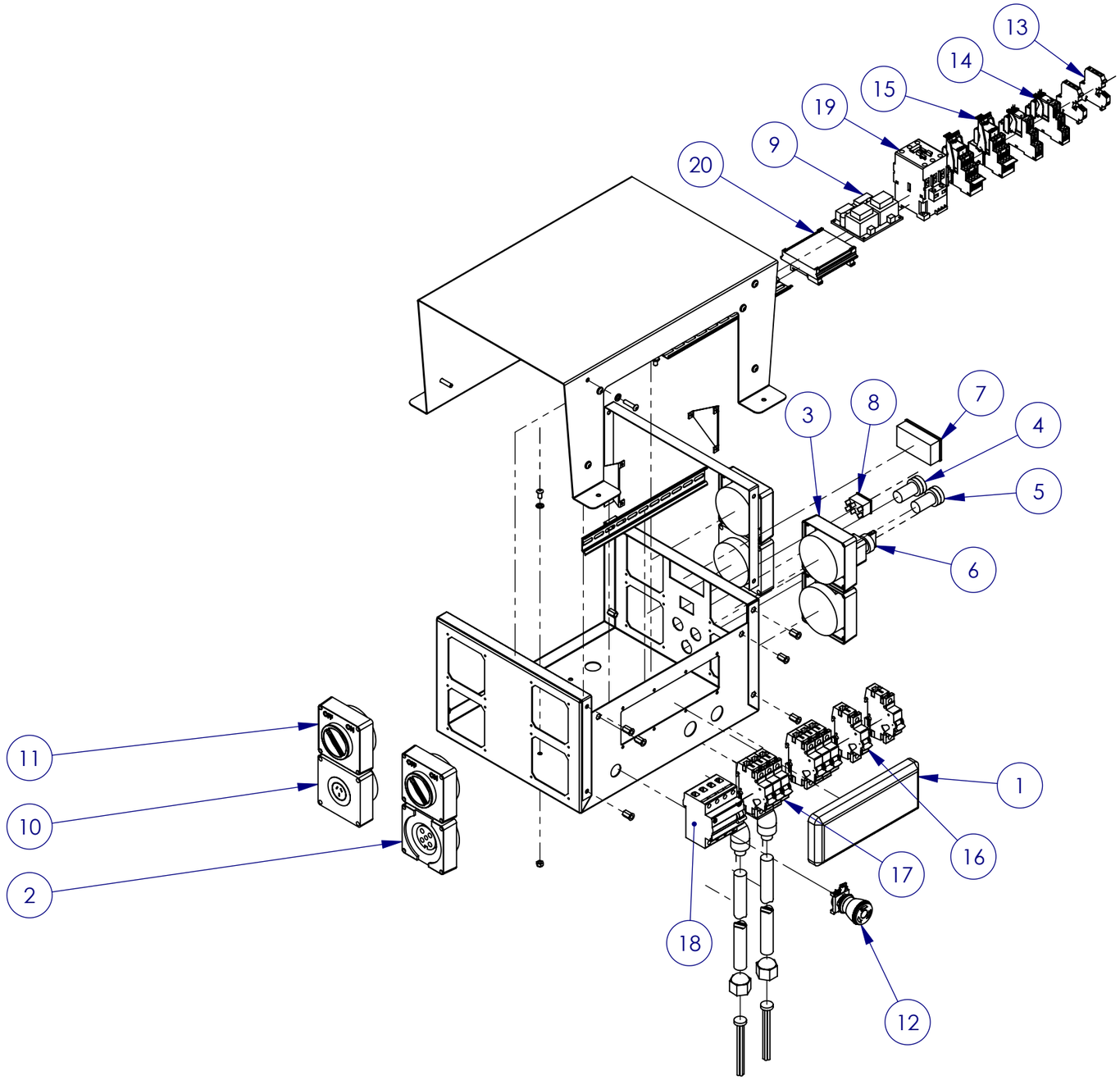

ITEM NO.	PART NO.	PART NAME	QTY
1	GEN-32P-04-03	INSPECTION WINDOW	1
2	MAK-UP-75	32 A 415 V 3 PHASE OUTLET	2
3	MAK-UP-76	3 PHASE SWITCH 32 A	2
4	MAK-UP-88	GREEN LED	1
5	MAK-UP-80	RED LED	1
6	MAK-UP-83	PARALLEL ISOLATOR SWITCH	1
7	MAK-UP-81	Hz METER	1
8	MAK-UP-82	GEN SELECTOR SWITCH	1
9	MAK-UP-73	PARALLELING PCB	1
10	MAK-UP-77	15 A 240 V SINGLE PHASE OUTLET SOCKET	2
11	MAK-UP-78	ISOLATOR SWITCH 20A	2
12	MAK-UP-140	E-STOP	1
13	GEN-32P-04-08	1A IN-LINE FUSE AND HOLDER	2
14	GEN-32P-04-09	2P 240VAC RELAY AND BASE	2
15	GEN-32P-04-10	4P 12VDC RELAY AND BASE	2
16	GEN-32P-04-13	16A D-CURVE CIRCUIT BREAKER	2
17	GEN-32P-04-14	32A D-CURVE CIRCUIT BREAKER	2
18	GEN-32P-04-12	63A RCD SAFETY SWITCH	1
19	GEN-32P-04-11	CA-7-55-00-240VAC CONTACTOR	1
20	GEN-32P-04-16	PCB DIN RAIL INTERFACE	1

MAKINEX

Sydney (Head Office)
15 Waltham St
Artarmon, 2064
NSW, Australia

Ph: 1300 795 953
Fax: (02) 9439 9815
www.makinex.com.au
sales@makinex.com.au

COPYRIGHT 2019 MAKINEX.
WARNING: Copyright in this drawing remains the property of Kennards Innovation and Sustainability and copying in whole or part is not permitted without the written authority of the copyright owner.

GENERAL TOLERANCES
(Unless otherwise noted)
0-100mm: ± 0.25 mm
100mm - 500mm: ± 0.5 mm
500mm +: ± 1.0 mm
Angular: ± 1 deg.

Third Angle Projection - AS 1100

DATE: 22-Jun-21

SCALE: 1:8 A3

All Dimensions are in Millimetres
Break All Sharp Corners and Remove Burrs & Swarf

25
Denotes Critical Dimension

PROJECT: GEN-32P-AU

DWG NO.	TITLE	MATERIAL	REV: 001	FINISH
GEN-32P-04-00	ELECTRICAL BOX ASSEMBLY	SEE PARTS	DRN: DM	SEE PARTS

NOTES:

PRINTED: 22-Jun-21

REVISIONS		
REV.	DESCRIPTION	DATE

PRINT MAY BE REDUCED - DO NOT SCALE.

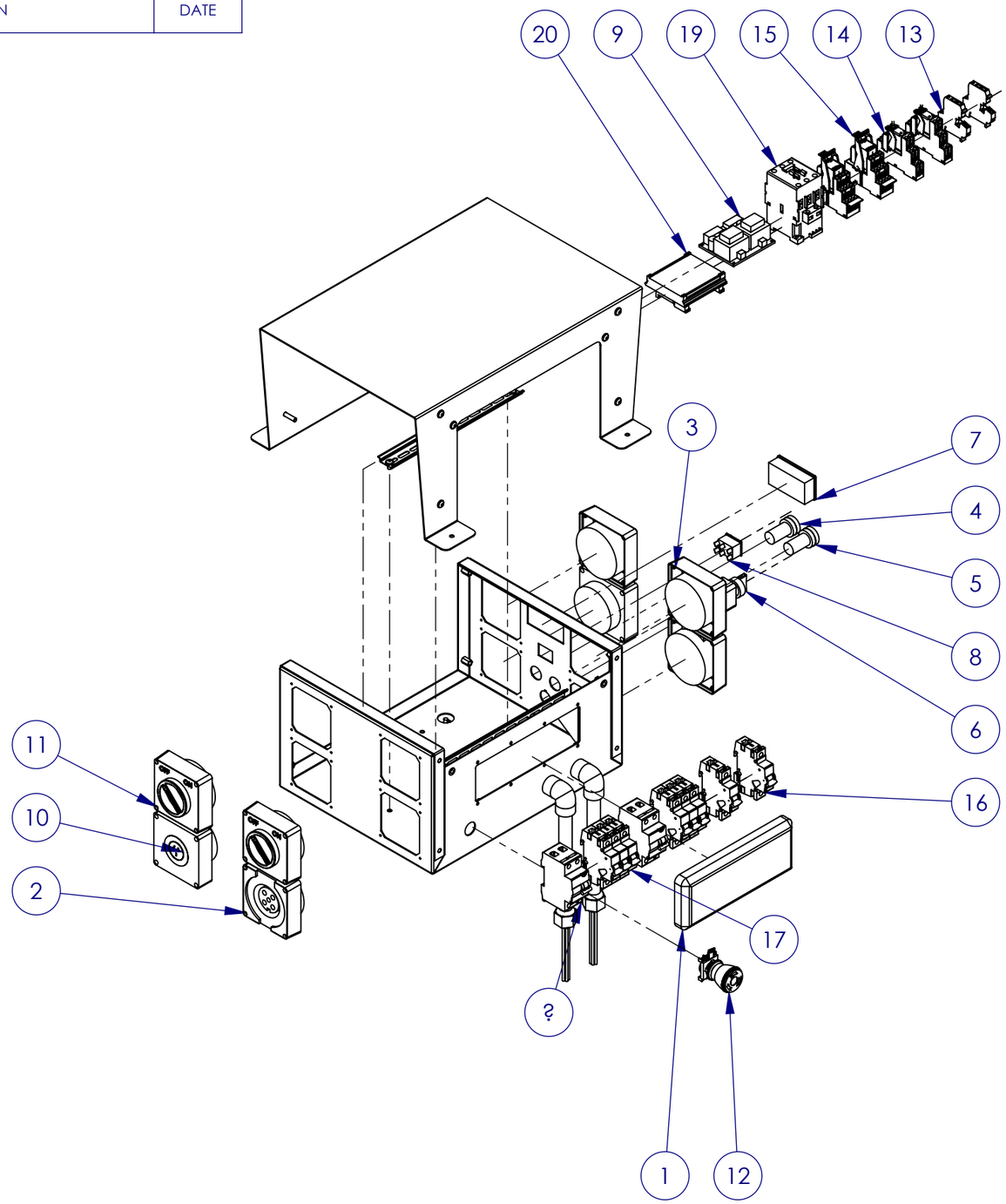

ITEM NO.	PART NO.	PART NAME	QTY
1	GEN-32P-04-03	INSPECTION WINDOW	1
2	MAK-UP-75	32 A 415 V 3 PHASE OUTLET	2
3	MAK-UP-76	3 PHASE SWITCH 32 A	2
4	MAK-UP-88	GREEN LED	1
5	MAK-UP-80	RED LED	1
6	MAK-UP-83	PARALLEL ISOLATOR SWITCH	1
7	MAK-UP-81	Hz METER	1
8	MAK-UP-82	GEN SELECTOR SWITCH	1
9	MAK-UP-73	PARALLELING PCB	1
10	MAK-UP-77	15 A 240 V SINGLE PHASE OUTLET SOCKET	2
11	MAK-UP-78	ISOLATOR SWITCH 20A	2
12	MAK-UP-140	E-STOP	1
13	GEN-32P-04-08	1A IN-LINE FUSE AND HOLDER	2
14	GEN-32P-04-09	2P 240VAC RELAY AND BASE	2
15	GEN-32P-04-10	4P 12VDC RELAY AND BASE	2
16	GEN-32P-04-13	16A D-CURVE CIRCUIT BREAKER	2
17	GEN-32P-04-14	32A D-CURVE CIRCUIT BREAKER	2
18	GEN-32P-04-16	32A VIGI BLOCK RCD	2
19	GEN-32P-04-11	CA-7-55-00-240VAC CONTACTOR	1
20	GEN-32P-04-16	PCB DIN RAIL INTERFACE	1

MAKINEX

Sydney (Head Office)
15 Waltham St
Artarmon, 2064
NSW, Australia

Ph: 1300 795 953
Fax: (02) 9439 9815
www.makinex.com.au
sales@makinex.com.au

COPYRIGHT 2019 MAKINEX.
WARNING: Copyright in this drawing remains the property of Kennards Innovation and Sustainability and copying in whole or part is not permitted without the written authority of the copyright owner.

GENERAL TOLERANCES
(Unless otherwise noted)
0-100mm: ± 0.25 mm
100mm - 500mm: ± 0.5 mm
500mm +: ± 1.0 mm
Angular: ± 1 deg.

Third Angle Projection - AS 1100

DATE: 22-Jun-21

SCALE: 1:8 A3

All Dimensions are in Millimetres
Break All Sharp Corners and Remove Burrs & Swarf

25
Denotes Critical Dimension

PROJECT: GEN-32P-AU

DWG NO.	TITLE	MATERIAL	REV: 001	FINISH
GEN-32P-04-00	ELECTRICAL BOX ASSEMBLY	SEE PARTS	DRN: DM	SEE PARTS

NOTES:

PRINTED: 22-Jun-21

REVISIONS		
REV.	DESCRIPTION	DATE

PRINT MAY BE REDUCED - DO NOT SCALE.

ITEM NO.	PART NO.	PART NAME	QTY
1	GEN-20P-04-00	GX690 ENGINE WITH MUFFLER	1
2	RF2-17.5-2	ALTERNATOR 16 KW 415, 50 Hz	1

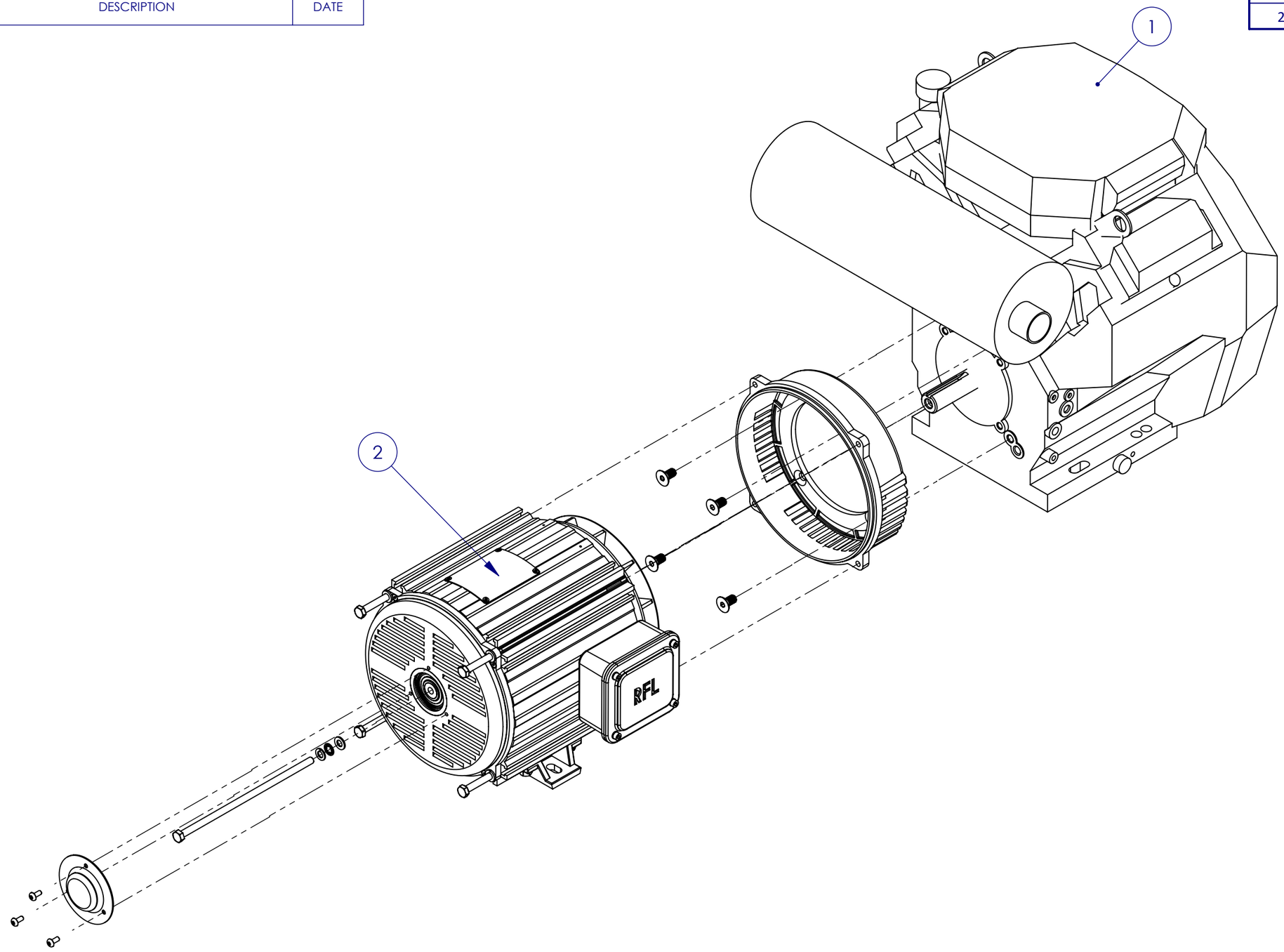

MAKINEX

Sydney (Head Office)
15 Waltham St
Artarmon, 2064
NSW, Australia

Ph: 1300 795 953
Fax: (02) 9439 9815
www.makinex.com.au
sales@makinex.com.au

COPYRIGHT 2019 MAKINEX.
WARNING: Copyright in this drawing remains the property of Kennards Innovation and Sustainability and copying in whole or part is not permitted without the written authority of the copyright owner.

GENERAL TOLERANCES
(Unless otherwise noted)
0-100mm: ± 0.25 mm
100mm - 500mm: ± 0.5 mm
500mm +: ± 1.0 mm
Angular: ± 1 deg.

Third Angle Projection - AS 1100

DATE: 22-Jun-21

SCALE: 1:5 A3

All Dimensions are in Millimetres
Break All Sharp Corners and Remove Burrs & Swarf

25
Denotes Critical Dimension

PROJECT: GEN-32P-AU

DWG NO.	TITLE	MATERIAL	REV: 000	FINISH
GEN-32P-03-00	ENGINE + ALTERNATOR ASSEMBLY		DRN: DM	

NOTES:

PRINTED: 22-Jun-21